DRAW WIRE SENSOR

Series LX

Key-Features:

- *Low cost series for use in dry environments*
- *Available measurement ranges: 50 to 1250 mm*
- *Linearity up to ±0.1 % of full scale*
- *Output signal: Potentiometer, or optical Incremental-Encoder (TTL)*
- *Low weight: 85 g*
- *Thermoplastic body*
- *Compact size*
- *Wire rope: jacketed stainless steel*
- *Easy installation*

Content:

Technical Data	***....2***
Electrical Connection	***....2***
Technical Drawing	***....3***
Accessories	***....4***
Order Code	***....5***

05.05.15

WayCon
Positionsmesstechnik

TECHNICAL DATA

Model		LX-PA	LX-EP
Measurement Range MR	[mm]	50 to 1250 (see table below)	250 to 1250 (see Table below)
Sensor element		Potentiometer	Incremental Encoder
Protection class		IP40	
Voltage supply	[V]	max. 25	5, ±0.25
Current consumption	[mA]	-	max. 30
Resolution		depends on the signal quality of the reference voltage	up to 4.46 Pulses/mm (see table below) *
Linearity	[% MR]	±1, for MR up to 120 mm	±0.1
		±0.5, for MR up to 625 mm	
		±0.25, for MR up to 1250 mm	
Repeatability	[% MR]	±0.03	±0.015
Working temperature	[°C]	-25…+75	-40…+75
Output signal		0 to 1 kOhm, ±0.15 % (5 kOhm and 10 kOhm on request)	A/B signal, TTL compatible (not differential)
Wire rope		standard: jacketed stainless steel, ∅ 0.46 mm	
Housing material		thermoplastic body	
Weight	[g]	85	
Electrical connection		standard: solder terminal	5 square pins
Life cycle		MR up to 120 mm: 1.000.000 full stroke cycles	MR up to 625 mm: 2.000.000 full stroke cycles
		MR up to 625 mm: 250.000 full stroke cycles	MR up to 1250 mm: 1.000.000 full stroke cycles
		MR up to 1250 mm: 125.000 full stroke cycles	

* Resolution may be increased by a factor of four with interface electronics capable of quadrature times 4 counting mode.

Model	LX-PA-2	LX-PA-2,8	LX-PA-3,8	LX-PA-4,7	LX-PA-10	LX-PA-15	LX-PA-20	LX-PA-25	LX-PA-30	LX-PA-40	LX-PA-50
Measurement range	50	70	96	120	250	380	500	625	750	1000	1250
Output [mV/V/mm]	18.5	13.4	10.1	8.1	3.5	2.5	1.9	1.5	1.3	1	0.8
wire rope tension [N]	4.4	3.9	3.1	2.2	4.4	3.9	3.1	2.2	3.9	3.1	2.2

Model	LX-EP-10-2	LX-EP-15	LX-EP-20	LX-EP-25	LX-EP-30	LX-EP-40	LX-EP-50
Measurement range	250	380	500	625	750	1000	1250
Resolution [Pulses/mm]	4.46	3.25	2.45	1.98	3.25	2.45	1.98
wire rope tension [N]	4.4	3.9	3.1	2.2	3.9	3.1	2.2

ELECTRICAL CONNECTION

LX-PA

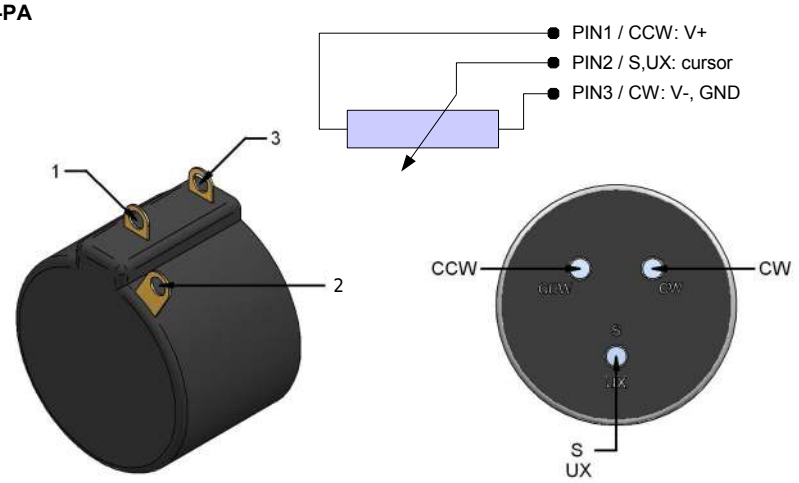

LX-PA-10 to LX-PA-50 LX-PA-2 to LX-PA-4,7

LX-EP

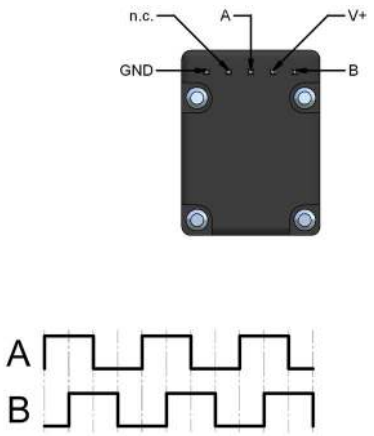

TECHNICAL DRAWING

LX-PA-2 to LX-PA-4,7

length A [mm]	measurement range [mm]
25.7	50
29.0	70
33.0	96
37.1	120

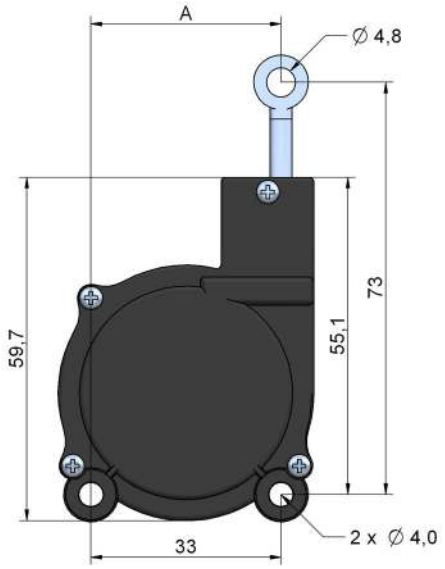

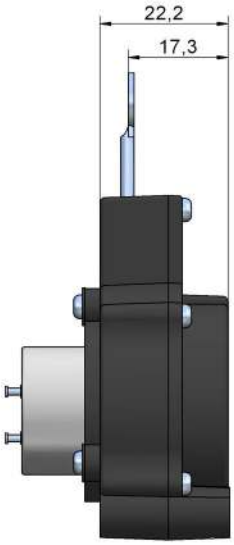

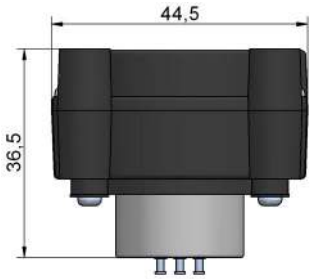

LX-PA-10 to LX-PA-50

length A [mm]	measurement range [mm]
25.7	250
29.0	380, 750
33.0	500, 1000
37.1	625, 1250

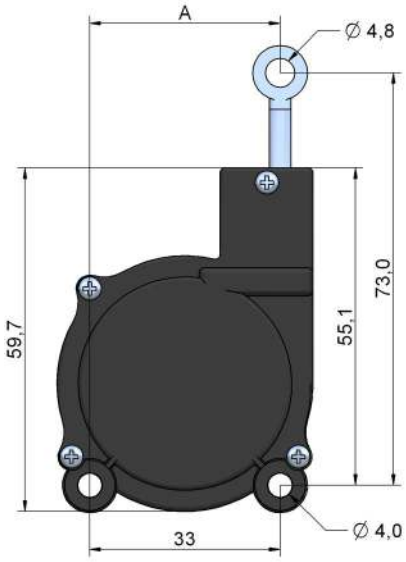

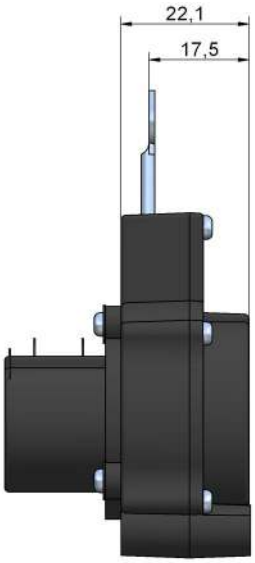

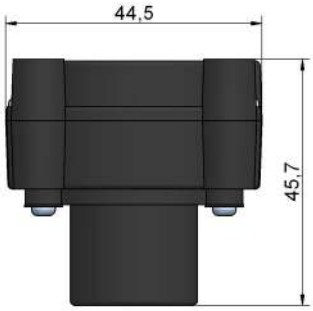

TECHNICAL DRAWING

LX-EP

length A [mm]	measurement range [mm]
25.7	250
29.0	380, 750
33.0	500, 1000
37.1	625, 1250

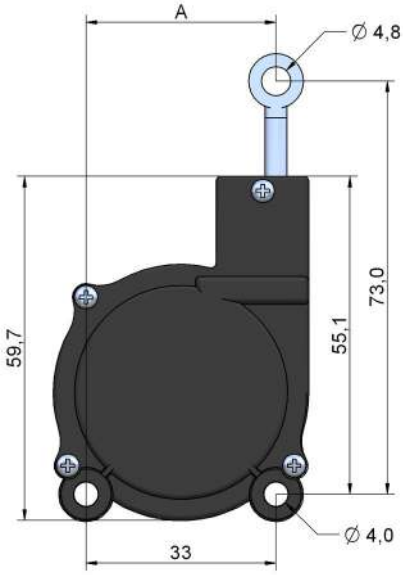

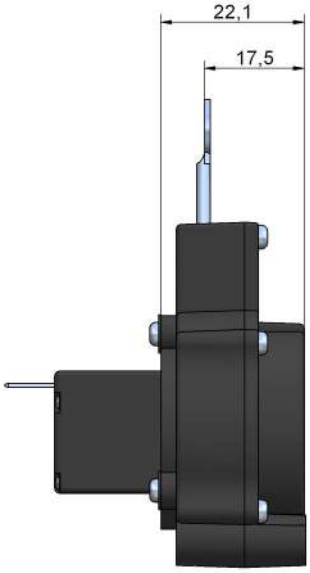

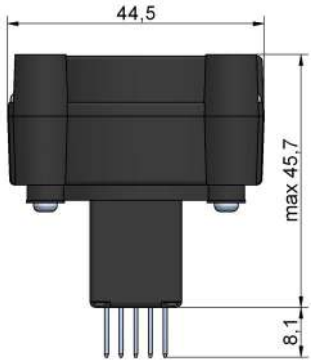

ACCESSORIES

LX-Mount

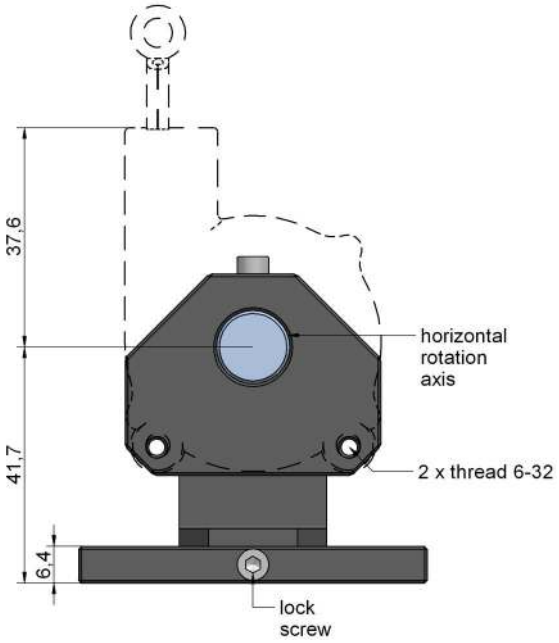

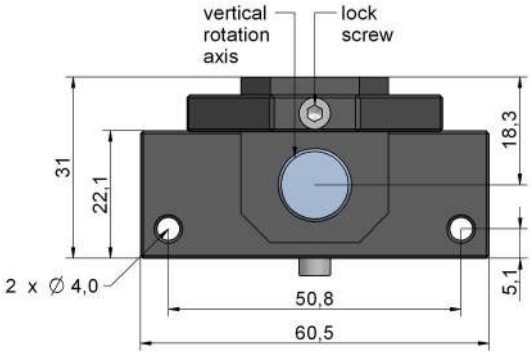

ORDER CODE LX-PA

LX-PA - □ - □□ N - N □□

Measurement range	
see table on page 2	

Wire rope material	
Standard: nylon jacketed stainless steel (∅0.45 mm)	N
Stainless steel (∅0.4 mm)	S

Potentiometer value	
Standard 1 kΩ	1
2 kΩ	2
5 kΩ	3
10 kΩ	4

	Connection (see pictures below)
N	Standard: no connector
C	Cable to cable connector with mating connector
K	Cable to cable connector without mating connector

	Output
N	Standard: solder terminal
P	Cable output with 0.15 m cable
1	Cable output with 1.0 m cable
2	Cable output with 2.0 m cable
3	Cable output with 3.0 m cable
4	Cable output with 4.0 m cable
5	Cable output with 5.0 m cable

The Standard versions LX-PA-...-N1N-NNN are usually in stock. Different versions have a typical delivery time of 3 weeks.

Connection LX-PA

Standard
N: no connector (solder terminal)

N: no connector (cable output with open ends

C: Cable to cable connector with mating connector

K: Cable to cable connector without mating connector

ORDER CODE LX-EP

LX-EP - □

Measurement range	
see table on page 2	

Connection LX-EP

Standard: solder terminal

Accessory: connection cable with mating connector

Order code connection cable	Cable length
10172-1M	1 meter
10172-2M	2 meter
10172-3M	3 meter
10172-4M	4 meter
10172-5M	5 meter

Cable colour	Function
black	GND
n.c.	n.c.
white	Channel A
red	$+V_{in}$
green	Channel B

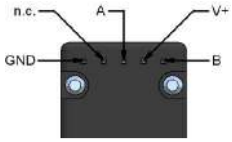

ORDER CODE STANDARD VERSIONS

LX-PA-2-N1N-NNN	**50 mm**
LX-PA-2,8-N1N-NNN	**70 mm**
LX-PA-3,8-N1N-NNN	**96 mm**
LX-PA-4,7-N1N-NNN	**120 mm**
LX-PA-10-N1N-NNN	**250 mm**
LX-PA-15-N1N-NNN	**380 mm**
LX-PA-20-N1N-NNN	**500 mm**
LX-PA-25-N1N-NNN	**625 mm**
LX-PA-30-N1N-NNN	**750 mm**
LX-PA-40-N1N-NNN	**1000 mm**
LX-PA-50-N1N-NNN	**1250 mm**

LX-EP-10	**250 mm**
LX-EP-15	**380 mm**
LX-EP-20	**500 mm**
LX-EP-25	**625 mm**
LX-EP-30	**750 mm**
LX-EP-40	**1000 mm**
LX-EP-50	**1250 mm**

Accessories	
LX-Mount	Mounting kit, adjustable in 2-dimensions

Connection cables for LX-EP	
10172-1M	1 meter with mating connector
10172-2M	2 meter with mating connector
10172-3M	3 meter with mating connector
10172-4M	4 meter with mating connector
10172-5M	5 meter with mating connector

WARNING NOTICES

- Don‘t let the rope snap back. If the rope is retracted freely, this may lead to injuries (whiplash effect) and the device may be damaged. Caution when unhooking and retracting the rope into the sensor.
- Never exceed the specified measurement range when extracting the rope!
- Do not try to open the device. The stored energy of the spring drive may lead to injuries when being mishandled.
- Do not touch the rope when operating the sensor.
- Avoid guiding the rope over edges or corners. Use a deflection pulley instead.
- Do not operate the sensor if the rope is buckled or damaged. A ripping of the rope may lead to injuries or a damaging of the sensor.

Subject to change without prior notice.

WayCon Positionsmesstechnik GmbH
email: info@waycon.de
internet: www.waycon.de

Head Office
Mehlbeerenstr. 4
82024 Taufkirchen
Tel. +49 (0)89 67 97 13-0
Fax +49 (0)89 67 97 13-250

Office Köln
Auf der Pehle 1
50321 Brühl
Tel. +49 (0)2232 56 79 44
Fax +49 (0)2232 56 79 45