DRAW WIRE SENSOR

Series SX50

Key-Features:

- Measurement ranges 50 mm up to 1250 mm
- Analog Output: Potentiometer, 0...10 V, 4...20 mA
- Digital Output Incremental: RS422 (TTL), Push-Pull
- Digital Output Absolute: CANopen, SSI
- Linearity up to ±0.02% of full scale
- Protection class up to IP67
- Temperature range: -20...+85 °C (optional -40 °C or +120 °C)
- High dynamics
- High interference immunity factor
- Customised versions available

Content:

Introduction	2
Analog Output	3
Digital Incremental Output	5
Digital Absolute Output	7
Description CANopen	8
Description SSI	9
Options	..10
Accessories	..11
Installation	..13
Order Code	..14

03.12.15

WayCon
Positionsmesstechnik

INTRODUCTION

WayCon Positionsmesstechnik GmbH is a manufacturer of high quality draw wire position sensors for industrial use. Due to its small overall size, its short assembly time and its possible customisation, the SX sensor technology is a cost-effective and flexible solution for a wide range of industrial applications. The dynamics of the draw wire transducer allows a high motion speed and acceleration of the measuring target. Its rugged design and high quality makes applications in harsh industrial environments possible. Special instruments are available with mounting service of encoder on site, as well as customised versions of housing.

Sensor principle:
The key component of a draw wire sensor is a highly flexible steel wire rope, that is winded single-layered on an ultra light capstan. This capstan is connected to the sensor housing by a pre-stressed spring. The end of the steel wire rope, that is equipped with a rope clip gets connected to the target object. As soon as the distance between sensor and target object changes, the steel wire rope gets pulled out of the sensor and is rolled off the capstan (or vice versa). The shaft of the capstan is connected to a potentiometer (for analog output signals), or to an encoder (for digital output signals). If there is a rotation of the capstan due to a change in the distance to the target object, the sensor element will turn proportionally. This way the potentiometer, or the encoder converts a linear movement into a proportional electrical signal. If a standard analog output signal, like 0...10 V or 4...20 mA is needed, the sensor is equipped with an additional electronics.

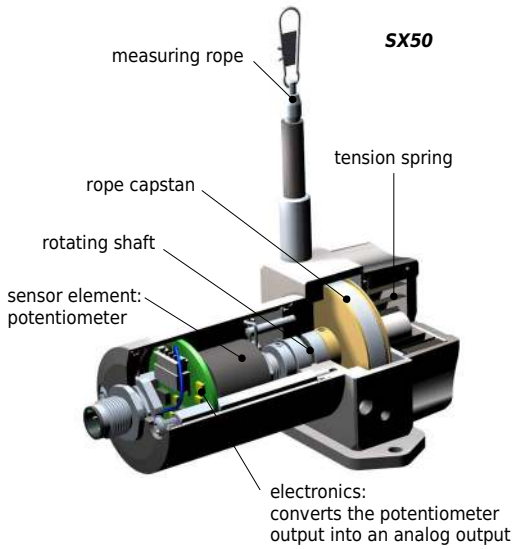

SPECIAL FEATURES

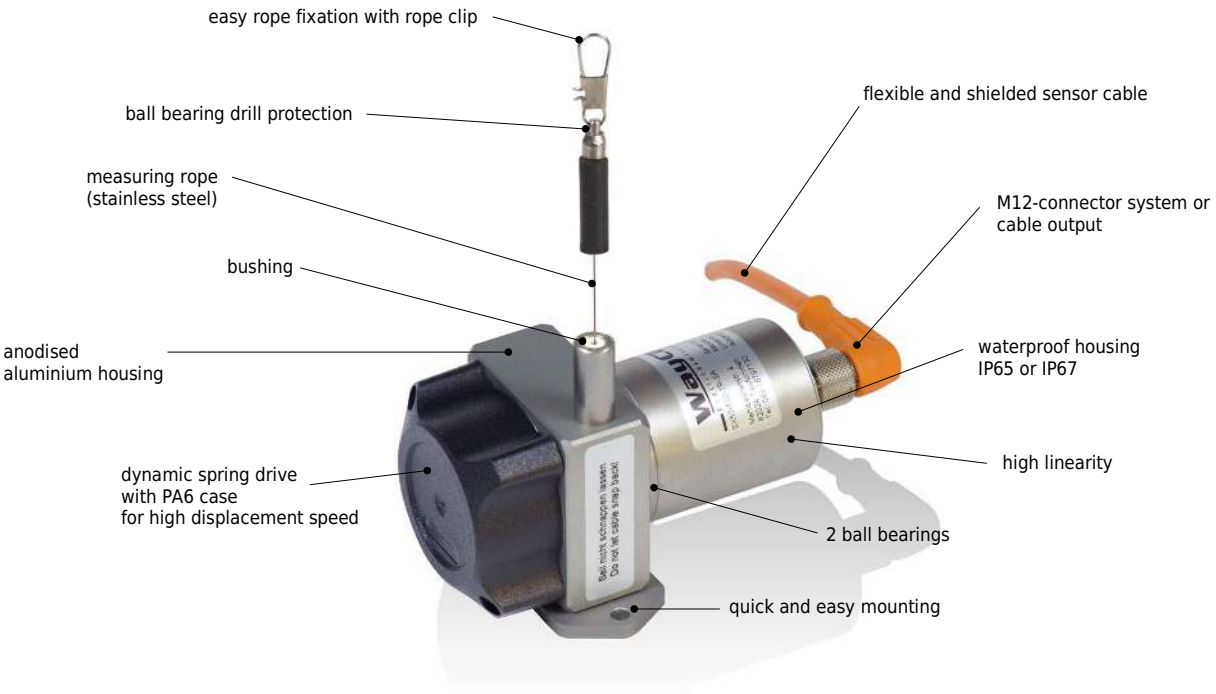

WARNING NOTICES

- Don't let the rope snap back. If the rope is retracted freely, this may lead to injuries (whiplash effect) and the device may be damaged. Caution when unhooking and retracting the rope into the sensor.
- Never exceed the specified measurement range when extracting the rope!
- Do not try to open the device. The stored energy of the spring drive may lead to injuries when being mishandled.
- Do not touch the rope when operating the sensor.
- Avoid guiding the rope over edges or corners. Use a deflection pulley instead.
- Do not operate the sensor if the rope is buckled or damaged. A ripping of the rope may lead to injuries or a damaging of the sensor.

TECHNICAL DATA ANALOG OUTPUT

Measurement range *	[mm]	50	75	100	125	150	225	250	300	375	500	625	750	1000	1250
Linearity	[%]	0.50	0.50	0.50	0.50	0.15	0.15	0.15	0.15	0.15	0.15	0.15	0.10	0.10	0.10
Improved linearity (optional)	[%]	-	-	-	-	0.10	0.10	0.10	0.10	0.10	0.10	0.10	0.05	0.05	0.05
Improved linearity (optional) **	[%]	0.10	0.10	0.10	0.10	-	-	-	-	-	-	-	-	-	-
Resolution		see types of output table below													
Sensor element		Hybrid Potentiometer													
Connection		connector output M12 axial or cable output axial (TPE cable, standard length 2 m)													
Protection class		IP65, optional IP67													
Humidity		maximum 90 % relative, no condensation													
Temperature	[°C]	standard: -20…+85 / optional: -40…+85 / optional: -20…+120 °C (only with Potentiometer (1R) and cable output (KA))													
Mechanical data		extraction force, maximum velocity and maximum acceleration see table page 13													
Life expectancy		approx. 2 million full strokes (dependent on the displacement speed)													
Weight	[g]	300 to 500, depending on the measurement range													
Housing		aluminium, anodised, spring case PA6													
Accessories		cables, connectors, digital displays, deflection pulley, rope extensions, magnetic clamp (see pages 11 and 12)													

* other ranges on request

** special version with unprotected potentiometer, protection class IP40 (please contact the WayCon sales team)

TYPES OF ANALOG OUTPUT

Output: Potentiometer (voltage divider)	
Output	1 kΩ
Supply	max. 30 V
Recommended cursor current	< 1 µA
Resolution	theoretically unlimited, limited by the noise
Noise	dependent on the quality ot the power supply
Working temperature	-20…+85 °C , optional: -40…+85 °C / -20…+120 °C
Temperature coefficient	± 0.0025 %/K

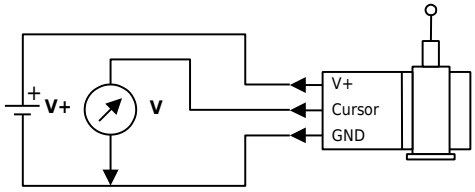

Output: Voltage 0…10 V	
Output	0…10 V, galvanically isolated, 4 conductors
Supply	12…30 VDC
Current consumption	max. 22.5 mA (unloaded)
Output current	max. 10 mA, min. load 10 kOhm
Dynamics	< 3 ms from 0…100 % and 100…0 %
Resolution	limited by the noise
Noise	3 mV_{pp} typical, max. 37 mV_{pp}
Inverse-polarity protection	yes, infinite
Short-circuit proof	yes, permanent
Working temperature	-20…+85 °C , optional: -40…+85 °C
Temperature coefficient	0.0037 %/K
Electromagnetic compatibility (EMC)	according to EN 61326-1:2006

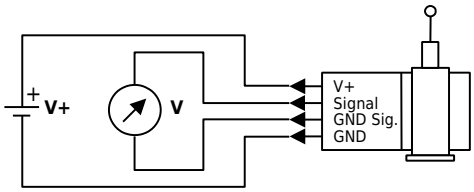

Note: GND Sig. and GND may be connected in a 3-wire system.

Output: Current 4…20 mA	
Output	4…20 mA, 2 conductors
Supply	12…30 VDC
Output current	max. 50 mA in case of error
Dynamics	< 1 ms from 0…100 % and 100…0 %
Resolution	limited by the noise
Noise	0.03 mA_{pp} = 6 mV_{pp} at 200 Ohm
Inverse-polarity protection	yes, infinite
Working temperature	-20…+85 °C , optional: -40…+85 °C
Temperature coefficient	0.0079 %/K
Electromagnetic compatibility (EMC)	according to EN 61326-1:2006

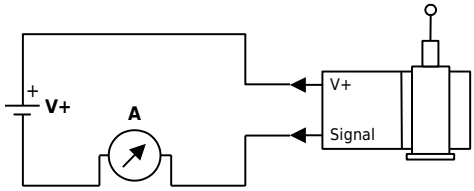

TECHNICAL DRAWING ANALOG OUTPUT

Analog output

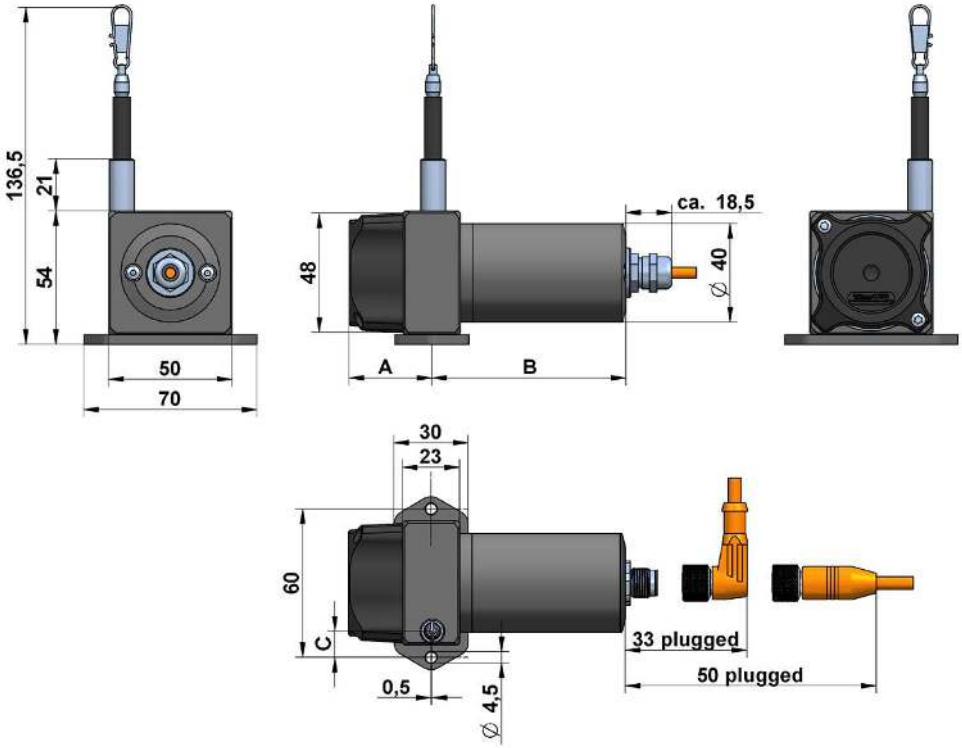

Measurement range	Option	A	C
50 / 150 / 250 mm	Standard	26.50	21.30
75 / 225 / 750 mm	Standard	26.50	17.00
100 / 300 / 500 / 1000 mm	Standard	26.50	12.75
125 / 375 / 625 / 1250 mm	Standard	33.50	10.30
50 / 150 / 250 mm	HG(50)	33.50	21.30
75 / 225 / 750 mm	HG(50)	33.50	17.00
100 / 300 / 500 / 1000 mm	HG(50)	33.50	12.75

Output	B
Potentiometer	65.0
10V / 420A	78.5

ELECTRICAL CONNECTION ANALOG OUTPUT

Cable output

Cable type	TPE, flexible
Cable direction	axial
Length	standard: 2 m, (others on request)
Diameter	4.5 mm
Wire	0.25 mm²
Temperature	fixed installation -30…+85 °C
	flexible installation -20…+85 °C

Cable colour	0…10 V	4…20 mA	1 kOhm
brown	V +	V +	V +
white	Signal	n. c.	Cursor
blue	GND	Signal	GND
black	GND Signal	n. c.	n. c.

Connector output

- M12, 4 poles

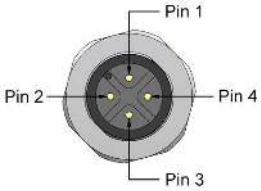

Pin	0…10 V	4…20 mA	1 kOhm
1	V +	V +	V +
2	Signal	n. c.	Cursor
3	GND	Signal	GND
4	GND Signal	n. c.	n. c.

TECHNICAL DATA DIGITAL OUTPUT INCREMENTAL

Measurement range *	[mm]	500, 750, 1250
Linearity	[%]	0,05, independent of the measurement range
Improved linearity (optional)	[%]	0,02, independent of the measurement range, only in combination with resolution 20 pulses/mm, or higher
Selectable resolution *	[pulses/mm]	1, 4, 10, 20, 28,8, 60** (this resolution can be raised by the factor 4 using quadruple edge detection)
Z-Pulse distance	[mm]	125
Sensor element		Incremental-Encoder (with optical code disk)
Output signal		A/B-Pulses (90° phase-delayed), Z-Pulse (plus inverted pulses A_{not}, B_{not}, Z_{not})
Connection		M12 connector output or cable output (PVC, standard length 2 m)
Protection class		IP65, optional IP67
Humidity		maximum 90 % relative, no condensation
Temperature range	[°C]	-20…+85
Mechanical data		extraction force, maximum velocity and maximum acceleration see table page 13
Life expectancy		approx. 2 million full strokes (dependent on the displacement speed)
Weight	[g]	300 to 500, depending on the measurement range
Housing		aluminium, anodised, spring case PA6
Accessories		digital displays, deflection pulley, rope extensions, magnetic clamp (see pages 11 and 12)

* others on request

** Special version (please contact the WayCon sales team)

Electrical Data		**Linedriver L** **RS422 (TTL-compatible)**	**Push-Pull G**
Power supply +V	[VDC]	5, ±5 %	8…30
Current consumption (no load)	[mA]	typical 40, max. 90	max. 40
Load/ Channel	[mA]	max. ±20	max. ±20
Pulse frequency	[kHz]	max. 300	max. 200
Signal level high	[V]	min. 2.5	min. +V – 3
Signal level low	[V]	max. 0.5	max. 0.5
Recommended circuit		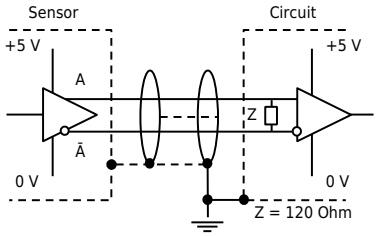	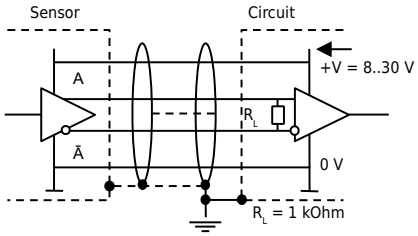

OUTPUT SIGNAL DIGITAL OUTPUT INCREMENTAL

Output signal

Pulses A and B are 90° phase-delayed (detection of direction). The Z-Pulse is emitted once per turn. The Z-Pulse distance is 125 mm (= circumference of the rope drum) and can be used as a reference mark.

The diagram shows the signal without inverted signals; time line for return of rope.

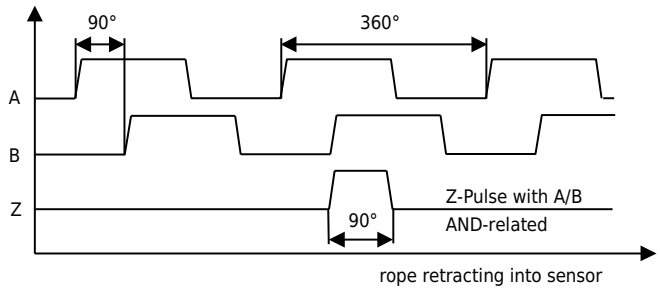

TECHNICAL DRAWING DIGITAL OUTPUT INCREMENTAL

Digital output Incremental

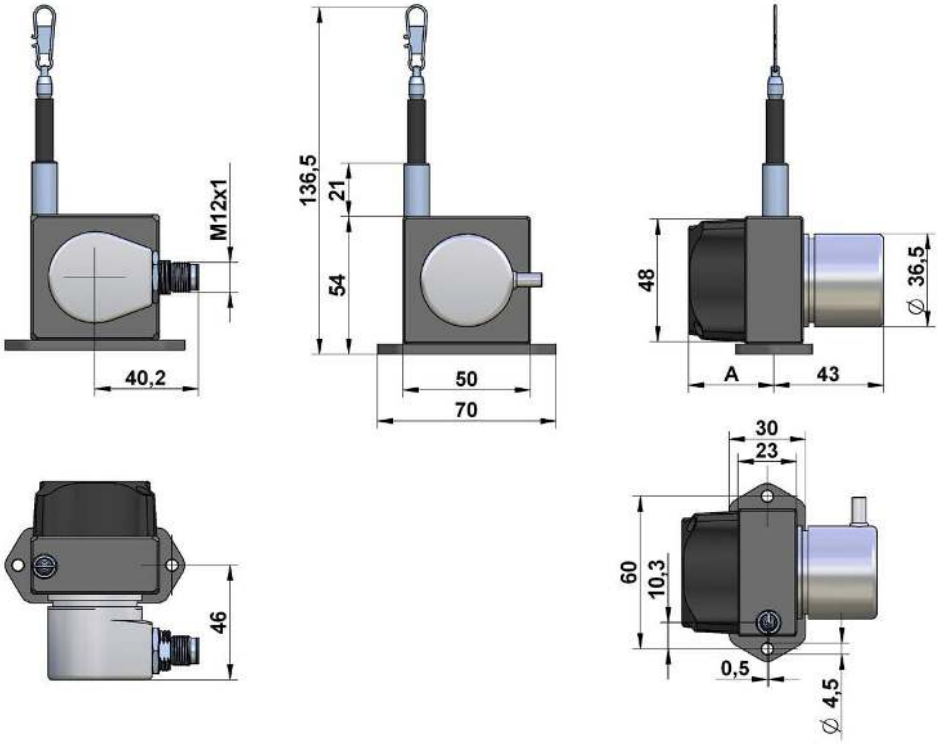

Option	A
Standard	33.5

CONNECTION DIGITAL OUTPUT INCREMENTAL

Connector output, M12, 8 poles

Signal	0 V	+V	A	A Not	B	B Not	Z	Z Not
Pin	1	2	3	4	5	6	7	8

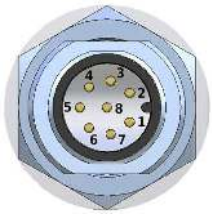

Cable output

Cable type	PVC, flexible									
Cable direction	radial									
Length	2.0 m									
Diameter	ø 4.5 mm									
Wire	10 x 0.14 mm²									
Temperature	fixed installation -30…+85 °C flexible installation -20…+85 °C									
Signal	0 V	+V	A	A Not	B	B Not	Z	Z Not	0 V_{sens}*	+V_{sens}*
Cable colour	white	brown	green	yellow	gray	pink	blue	red	black	violet

* only for Linedriver L

Explanation

+V: Encoder power supply +VDC

0 V: Encoder power supply ground GND (0 V)

0 V_{sens} / +V_{sens}: Only for Linedriver L: Using the sensor outputs of the encoder, the voltage present can be measured and if necessary increased accordingly

A, A_{Not}: Incremental output channel A

B, B_{Not}: Incremental output channel B

Z, Z_{Not}: Reference signal

TECHNICAL DATA DIGITAL OUTPUT ABSOLUTE, CANopen, SSI

		CANopen	SSI
Measurement range	[mm]	500, 750, 1250	
Linearity	[%]	0.05, independent of the measurement range	
Resolution scalable (with Software)		yes	no
Standard resolution	[Pulses/mm]	65.54, corresponds 0.015 mm (13 bit)	32.77, corresponds 0.03 mm (12 bit)
Maximum resolution	[Pulses/mm]	524.9, corresponds 0.0019 mm (16 bit)	-
Sensor element		Multiturn-Absolute-Encoder (with optical code disk)	
Connection		cable output tangential, with 1 or 5 m PUR cable	
Power supply	[VDC]	10…30 (reverse polarity protection of the power supply)	
Current consumption (no load, at 24 VDC)	[mA]	max. 80	max. 30
Protection class		IP65, optional IP67	
Humidity		max. 90 % relative, no condensation	
Temperature	[°C]	-20…+85	
Mechanical data		extraction force, maximum velocity and maximum acceleration see table page 13	
Life expectancy		approx. 2 million full strokes (dependent on the displacement speed)	
Weight	[g]	300 to 500, depending on the measurement range	
Housing		aluminium, anodised, spring case PA6	
Accessories		deflection pulley, rope extensions, magnetic clamp (see pages 11 and 12)	

TECHNICAL DRAWING DIGITAL OUTPUT ABSOLUTE

SSI, CANopen

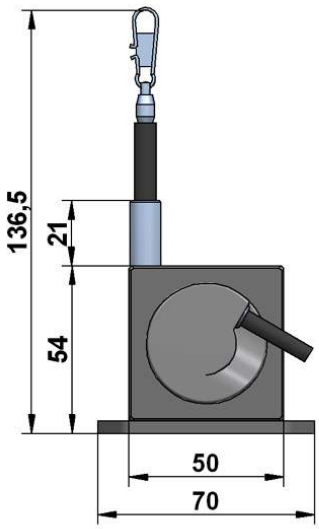

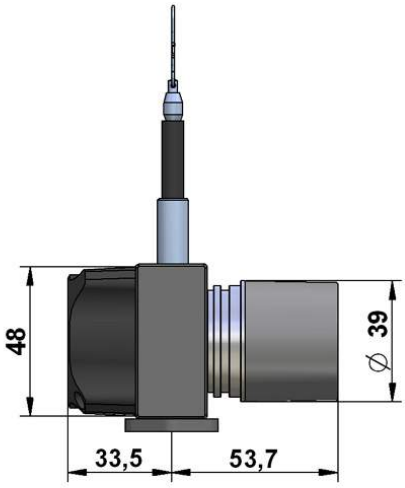

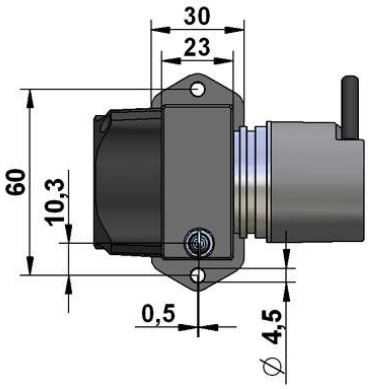

Detailed view: battery (data storage) integrated in the cable

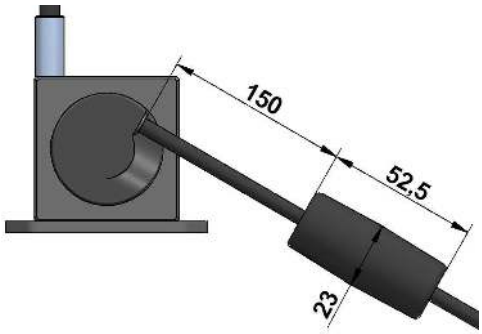

DESCRIPTION CANopen

Parameters of the CANopen Interface	
Code	Binary
Interface	CAN High-Speed acc. to ISO 11898, Basic- and Full-CAN, CAN Specification 2.0 B
Protocol	CANopen profile DS406 V3.2 with manufacturer-specific add-ons LSS-Service DS305 V2.0
Baud rate	10 … 1000 kbit/s (Software configurable)
Node address	1…127 (Software configurable)
Termination switchable	Software configurable
LSS Protocol	CIA LSS protocol DS305, Global command support for node address and baud rate Selective commands via attributes of the identity object

General information about CANopen

The CANopen encoders support the latest CANopen communication profile according to DS301 V4.02 . In addition, device-specific profiles like the encoder profile DS406 V3.2 and DS305 (LSS) are available.
The following operating modes may be selected: Polled Mode, Cyclic Mode, Sync Mode. Moreover, scale factors, preset values, limit switch values and many other additional parameters can be programmed via the CANbus. When switching the device on, all parameters, which have been saved on a flash memory to protect them against power failure, are loaded again.
The following output values may be combined in a freely variable way as PDO (PDO mapping): position, speed as well as the status of the working area.
The encoders are available with a connector or a cable connection.
The device address and baud rate can be set/modified by means of the software.
The two-colour LED located on the back indicates the operating or fault status of the CAN-bus, as well as the status of the internal diagnostics.

CANbus Connection

The CANopen encoders are equipped with a Bus trunk line in various lengths and can be terminated in the device.
The devices do not have an integrated T-coupler nor they are looped internally and must therefore only be used as end devices.
If possible, drop lines should be avoided, as in principle they lead to signal reflections. As a rule the reflections caused by the drop lines are not critical, if they have completely decayed before the point in time when the scanning occurs.
The sum of all the drop lines should not, for a particular baud rate, exceed the maximum length Lu.

Lu < 5 m [16.40‘] cable length for 125 Kbit
Lu < 2 m [6.56‘] cable length for 250 Kbit
Lu < 1 m [3.28‘] cable length for 1 Mbit

When used as a drop line, the termination resistor should not be activated.
For a network with 3 encoders and 250 Kbit the maximum length of the drop line/ encoder must not exceed 70 cm.

Universal Scaling Function

At the end of the physical resolution of an encoder, when scaling is active, an error appears if the division of the physical limit (GP_U) by the programmed total resolution (TMR) does not produce an integer.
The Universal Scaling Function remedies this problem.

LSS Layer Setting Services DS305 V2.0

- Global support of Node-ID and baud rate
- Selective protocol via identity object (1018h)

CANopen Communication Profile DS301 V4.02

Among others, the following functionality is integrated. (Class C2 functionality):

- NMT Slave
- Heartbeat Protocol
- Identity Object
- Error Behaviour Object
- Variable PDO Mapping self-start programmable (Power on to operational), 3 Sending PDO’s
- Node address, baud rate and CANbus / Programmable termination.

CANopen Encoder Profile DS406 V3.2

The following parameters can be programmed:

- Event mode
- 1 work area with upper and lower limit and the corresponding output states
- Variable PDO mapping for position, speed, work area status
- Extended failure management for position sensing
- User interface with visual display of bus and failure status 1 LED two colours
- Customer-specific memory - 16 Bytes
- Customer-specific protocol

“Watchdog controlled” device

Electrical connection CANopen

Cable (Isolate unused wires individually before initial start-up)					
Signal	+V	0 V	CAN_GND	CAN_H	CAN_L
Cable color	brown	white	grey	green	yellow

DESCRIPTION SSI

Parameters of the SSI interface	
Output driver	RS485 Transceiver-type
Permissible load/channel	max. ±30 mA
Signal level	HIGH: typ 3.8 V LOW: with I_{Load} = 20 mA typ 1.3 V
Resolution	12 bit
Code	Gray
SSI clock rate	ST-resolution: 50 kHz...2 MHz
Monoflop time	≤ 15 µs
Data refresh rate	≤ 1 µs
Status and Parity bit	on request

SET Input

The encoder can be set to zero at any position by means of a HIGH signal on the SET input. Other preset values can be factory-programmed. The SET input has a signal processing time of approx. 1 ms, after which the new position data can be read via SSI or BiSS-C. Once the SET function has been triggered, the encoder requires an internal processing time of typ. 200 ms; during this time the power supply must not be switched off.
The SET function should be carried out whilst the encoder is at rest.

SET Input	
Input	active HIGH
Input type	comparator
Signal level (+V = power supply)	HIGH: min 60% of +V, max. +V LOW: max. 30% of +V
Input current	<0.5 mA
Min. pulse duration (SET)	10 ms
Input delay	1 ms
New position data readable after	1 ms
Internal processing time	200 ms

DIR Input

A HIGH signal switches the direction of rotation from the default CW to CCW. This inverted function can also be factory-programmed. If DIR is changed when the device is already switched on, then this will be interpreted as an error. The status output will switch to LOW.
Response time (DIR input): 1 ms

Power-On Delay

After Power-ON the device requires a time of approx. 150 ms before valid data can be read. Hot plugging of the encoder should be avoided.

Status Output

The status output serves to display various alarm or error messages. In normal operation the status output is HIGH (Open Collector with int. pull-up 22 kOhm). An active status output (LOW) displays: LED fault (failure or ageing) – over-temperature – undervoltage. In the SSI mode, the fault indication can only be reset by switching off the power supply to the device.

Electrical connection SSI

Cable (Isolate unused wires individually before initial start-up)										
Signal	0V	+V	C+	C-	D+	D-	SET	DIR	Status	H
Cable colour	white	brown	green	yellow	grey	pink	blue	red	purple	GND

+ V:	Encoder power supply +VDC
0 V:	Encoder power supply GND (0 V)
C+, C-:	Clock signal
D+, D-:	Data signal
SET:	SET Input
DIR:	Direction input: If this input is active, output values are counted backwards (decrease) when the shaft is turning clockwise.
H:	Plug connector housing (Shield)

OPTIONS

The following table gives an overview of frequently used options, with which the standard sensors can be equipped. Please pay attention that not all options can be combined. You will find the not-combinable options on page 14 and 15 in the section of the product codes.

Option	Order code	Description
Increased extraction force only in combination with analog output	HG	A reinforced spring drive provides a greater rope tension and allows a higher rope acceleration. Please note the different dimensions of the housing. (not available for ranges 125/375/625/1250 mm)
Protection class IP67 (instead of IP65)	IP67	Use option IP67, if the sensor will operate in a humid environment. Note that with this option there may occur a light hysteresis in the output signal due to the special sealing The max. acceleration and displacement speed are reduced to 60 % of the specified value.
Corrosion protection	CP	Includes a V4A wire rope, stainless steel bearings and option M4. The sensors rope drum gets HARTCOAT® coated. This coating is a hard-anodic oxidation that protects the sensor from corrosion by aggressive media (e. g. sea water) with a hard ceramics-like layer.
Increased corrosion protection only in combination with analog output	ICP	Components of the housing and the rope drum get HARTCOAT® coated. Includes the options CP, IP67 and M4.
Increased temperature range Low only in combination with analog output	T40	Special components and a low temperature grease make a working temperature down to -40 °C (up to +85°C) possible.
Increased temperature range High only in combination with potentiometer 1R	T120	Sensors with potentiometer output (1R) and cable output can be operated from -20 to +120 °C when this option is used. (NOT in combination with voltage-, current- or digital output signals)
Changed rope outlet	S1, S2, S3	S1: rope outlet sideways at the top S2*: rope outlet sideways at the bottom S3*: rope outlet on the bottom * with modified mounting plate, see page 13
Changed cable or connector orientation only for digital incremental output and digital absolute output	K1, K2, K3	Standard: sideways, opposite to the rope outlet K1: at the top K2: sideways, same side as the rope outlet K3: at the bottom
Rope fixation by M4 thread	M4	Optional, pivoted rope fixation with screw thread M4, length 22 mm. Ideal for attachment to through holes or thread holes M4.
Ring eye	RI	The end of the wire rope is equipped with a ring eye instead of a rope clip. Inside diameter 20 mm
Inverted output signal only in combination with analog output	IN	The analog signal of the sensor is increasing by extracting the rope (standard). Option IN inverts the signal, i. e. the signal of the sensor declines by extracting the rope.
Synthetic wire rope (instead of stainless steel wire rope)	COR	Synthetic wire rope, made out of abrasion resistant and enhanced Coramid. (not available for ranges 50/150/250/750/1000/1250 mm)

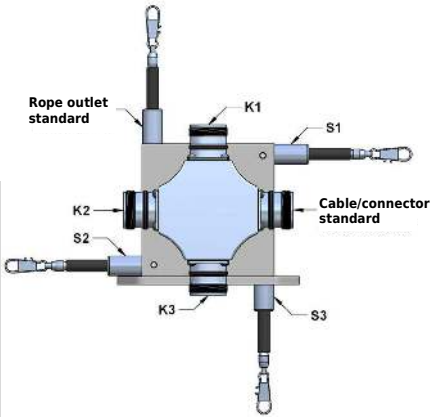

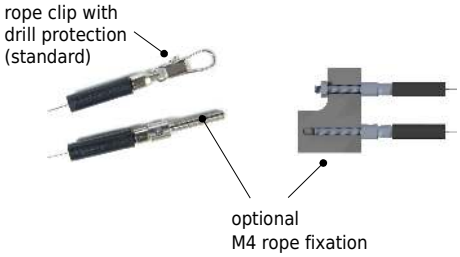

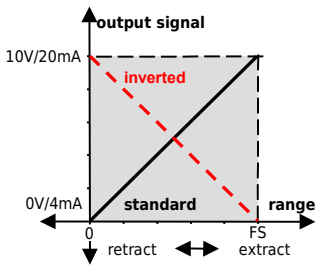

ACCESSORIES

Deflection pulley - UR2

The rope must be extracted from the sensor **vertically**. The maximum variation from the vertical is 3°. A deflection pulley allows a change in the direction of the wire rope. Several pulleys may be used. The rope clip must not be guided over the deflection pulley.

Material: anodised aluminium, POM

Mounting: by 2 hexagon socket or countersunk screws M6, vertical or horizontal mounting possible.

Ball bearings: with special low temperature grease and RS-sealing.

Temperature: -40...+80 °C.

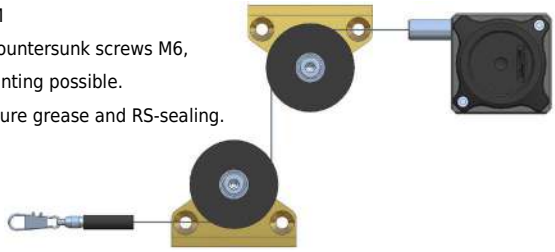

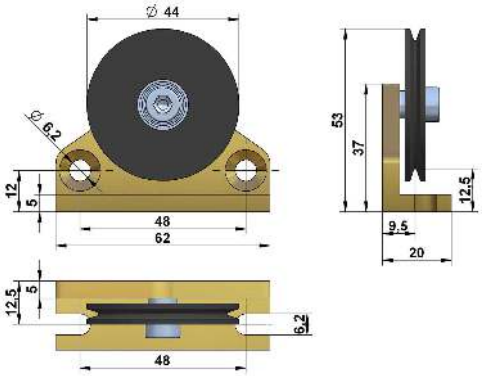

Rope extension - SV

For bridging a greater distance between the measuring target and the sensor a rope extension can be applied. The rope clip must not be guided over the deflection pulley.

Please specify the length needed in your order (XXXX). The minimum length is 150 mm:

SV1-XXXX: rope extension (150...4995 mm)

SV2-XXXX: rope extension (5000...19995 mm)

SV3-XXXX: rope extension (20000...40000 mm)

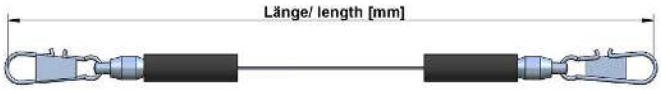

Magnetic clamp - MGG1

Use the magnetic clamp to quickly attach the rope to metallic objects without any assembly time. A rubber coating provides gentle contact (e. g. on varnished surfaces) and prevents from slipping due to vibration.
The magnet consists of a neodym core for an increased adhesive force of 260 N. The hook makes it easy to attach the rope clip.

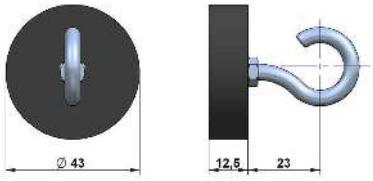

ACCESSORIES ANALOG Output

Cable with connector M12, 4 poles, shielded	
K4P2M-S-M12	2 m, connector straight, IP67
K4P5M-S-M12	5 m, connector straight, IP67
K4P10M-S-M12	10 m, connector straight, IP67
K4P2M-SW-M12	2 m, connector angular, IP67
K4P5M-SW-M12	5 m, connector angular, IP67
K4P10M-SW-M12	10 m, connector angular, IP67

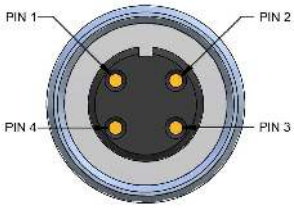

PIN No.	cable colour	PIN No.	cable colour
Pin 1	brown	Pin 3	blue
Pin 2	white	Pin 4	black

Mating Connector M12, 4 poles, shielded, IP67	
D4-G-M12-S	straight, M12 for self assembly
D4-W-M12-S	angular, M12 for self assembly
	cable passage: ø 4…8 mm
	wire cross-section: 0.14…0.34 mm²

Digital display - PAXD (for Potentiometer)

Use the PAXD display to visualise the measured distance of the position transducer with a potentiometer as sensor element. A transmission of the measurement data to a computer or PLC can be done with interface plug-in cards.

Input:	Potentiometer signal
Analog output (plug-in cards):	0...20 mA, 4...20 mA, 0...10 V
Serial interfaces (plug-in cards):	RS485, RS232, DeviceNet, USB, Profibus, Relay output, Transistor output
Protection class:	IP65 (Front panel)
Display:	5 digits
PAXD000B:	1 channel, power supply: 85 to 250 VAC
PAXD001B:	1 channel, power supply:: 11 to 36 VDC/24 VAC

For further information please see the data sheet of the PAXD display series

ACCESSORIES ANALOG OUTPUT

Digital displays PAXP (1 channel) and PAXDP (2 channels) for sensors with analog output signals 0..10 V or 4..20 mA

Use the PAXD or PAXDP display to visualise the measured distance of transducers with an analog output signal.
A transmission of the measurement data to a computer or PLC can be done with interface plug-in cards.

Inputs:	0...10 V or 4...20 mA, 2 independent counters (for PAXDP)
Analog output (plug-in cards):	0...20 mA, 4...20 mA, 0...10 V
Serial interfaces (plug-in cards):	RS485, RS232, DeviceNet, USB, Profibus, Relay output, Transistor output
Protection class:	IP65 (front panel)
Display:	5 digits
PAXP000B:	1 channel, power supply: 85 to 250 VAC
PAXP001B:	1 channel, power supply: 11 to 36 VDC/24 VAC
PAXDP000B:	2 channels, power supply: 85 to 250 VAC
PAXDP001B:	2 channels, power supply: 11 to 36 VDC/24 VAC

For further information please see the PAXD and PAXDP data sheet.

ACCESSORIES DIGITAL OUTPUT INCREMENTAL

Cable with connector M12, 8 poles, shielded	
K8P2M-S-M12	2 m, connector straight, IP67
K8P5M-S-M12	5 m, connector straight, IP67
K8P10M-S-M12	10 m, connector straight, IP67
K8P2M-SW-M12	2 m, connector angular, IP67
K8P5M-SW-M12	5 m, connector angular, IP67
K8P10M-SW-M12	10 m, connector angular, IP67

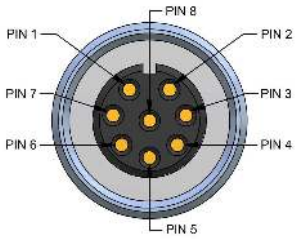

PIN No.	cable colour	PIN No.	cable colour	PIN No.	cable colour	PIN No.	cable colour
Pin 1	white	Pin 3	green	Pin 5	grey	Pin 7	blue
Pin 2	brown	Pin 4	yellow	Pin 6	pink	Pin 8	red

Mating connector M12, 8 poles, shielded, IP67	
D8-G-M12-S	mating connector straight
D8-W-M12-S	mating connector angular
	cable passage: ø 4…8 mm
	wire diameter: 0.14…0.34 mm²

Digital distance and speed display - WAY-D for incremental output signals

Use the WAY-D display to visualise the measured distance or the speed (tachometer) of the position transducer. A transfer of data to a PC or PLC can be done with the RS232 interface of the WAY-DR.

Protection class:	IP65 (front panel)
Display:	6 digits
Supply:	115 / 250 VAC

Output Linedriver L (TTL, RS422):

WAY-DS-5VH:	display only, input level TTL
WAY-DG-5VH:	display with two presets and switching outputs, input level TTL
WAY-DR-5VH:	display with serial interface RS232 / RS485, input level TTL

Output Push-Pull G:

WAY-DS:	display only, input level HTL
WAY-DG:	display with two presets and switching outputs, input level HTL
WAY-DR:	display with serial interface RS232 / RS485, input level HTL

For further information please see the WAY-D data sheet.

ACCESSORIES DIGITAL OUTPUT ABSOLUTE SSI

Digital distance and speed display - WAY-SSI for SSI output signals

Use the WAY-SSI display to visualise the measured distance or the speed (tachometer) of the position transducer.
A transfer of data to a PC or PLC can be done with the RS232 interface of the WAY-SSI-R.

Protection class:	IP65 (front panel)
Display:	6 digits
Supply:	115 / 250 VAC
WAY-SSI-S:	display only
WAY-SSI-A:	display with analog output
WAY-SSI-G:	display with two presets and switching outputs
WAY-SSI-R:	display with serial interface RS232 / RS485

For further information please see the WAY-SSI data sheet.

MECHANICAL DATA

Measurement Range	Extraction force		Speed*	Acceleration*	Increased extraction force: Option HG		Acceleration HG
[mm]	F_{min} [N]	F_{max} [N]	V_{max} [m/s]	a_{max} [m/s²]	F_{min} [N]	F_{max} [N]	a_{max} [m/s²]
50	5.8	6.2	8.0	200	13.2	13.7	400
75	3.6	3.8	8.0	200	7.3	7.9	400
100	3.4	3.6	8.0	200	5.9	6.4	400
125	4.2	4.4	10.0	300	-	-	-
150	6.0	6.8	8.0	200	13.2	13.7	400
225	4.2	4.4	8.0	200	7.3	8.3	400
250	5.0	6.4	8.0	200	13.2	13.7	400
300	2.8	3.2	8.0	200	5.9	6.7	400
375	4.0	4.4	10.0	300	-	-	-
500	3.0	3.6	8.0	200	5.9	6.9	400
625	4.4	5.2	10.0	300	-	-	-
750	3.2	4.4	8.0	200	7.3	9.8	400
1000	2.8	3.4	8.0	200	5.9	7.9	400
1250	4.6	5.6	10.0	300	-	-	-

* reduced to 60 % when option IP67 is used

INSTALLATION

- Mount the sensor at the designated place by using the fixing holes before extracting the rope and before attaching the rope to the measuring target.
- Open the rope clip after the sensor is fully mounted and extract the measuring rope. Hook the rope clip on the measuring object and close the bracket of the clip. For safety reasons put a screw driver trough the clip to extract the rope.
- Check the track of the measuring target on collision with the sensor housing and on exceeding the specified measurement range. When installing the sensor make sure that the rubber stopper does not touch the rope outlet.
- Connect the electronics according to the sensor type. When laying the cables be careful not to under-run the minimal allowed bending radius of the cable (5 x cable diameter).
- **The rope must be extracted from the sensor vertically**. The maximum variation from the vertical is 3°. Avoid carefully extracting the rope at an inclination, since the durability of the instrument would shorten considerably. If it is not possible to keep the limit of 3°, a deflection pulley has to be used.
- The measuring range begins after approximately 2 mm extracted rope (=**zero point)**. The mechanical reserve at the end of the measuring range is about 20 mm.
- When mounting outdoors protect the sensor and the rope from icing at temperatures below 0 °C.
- Guide the rope preferably in corners or guarded in channels to prevent pollution or accidental touch.
- When operating the sensor, take care **not to let the rope snap back** by mistake or extract the rope **over the specified measurement range,** as this might destroy the sensor.
- Maintenance: These instruments are maintenance-free. If however, the rope is soiled due to adverse environmental conditions, it can be cleaned with a cloth drenched in resin-free machine oil.

Mounting: standard rope outlet, rope outlet sideways top (S1)

The sensor is usually installed by using the regular mounting plate (see technical drawing on page 4).
By disassembling the mounting plate, there are 4 threads (2 x M3, 2 x M5) in the sensor housing for alternative installation.

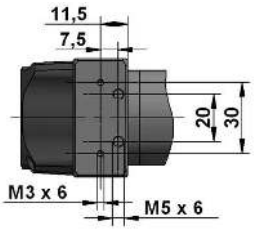

Mounting: rope outlet sideways bottom (S2), rope outlet bottom (S3)

Sensors with option rope outlet S2 and S3 have a modified base plate:

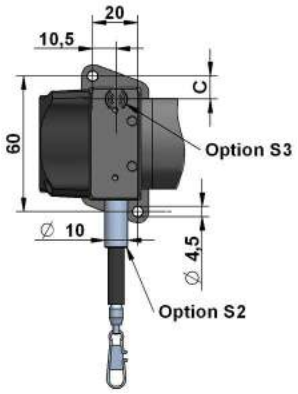

ORDER CODE ANALOG OUTPUT

SX50 – □ – □ – □ – □

Measurement ranges [mm] 50 / 75 / 100 / 125 / 150 / 225 / 250 / 300 / 375 / 500 / 625 / 750 / 1000 / 1250	
Analog Output Potentiometer 1 kOhm Voltage Output 0...10 V Current Output 4...20 mA	 1R 10V 420A
Connection Connector output M12 axial, 4 poles Cable output axial, specify cable length in m (minimum 2 m) example: **KA02** = 2 meter, KA05 = 5 meter	 **SA12** KA_ _
Version Standard Sensor with options	 - O

Option	Description
M4	rope fixation M4 thread
COR	synthetic wire rope, made out of Coramid
RI	ring eye (instead of rope clip)
S1	rope outlet sideways top
S2	rope outlet sideways bottom
S3	rope outlet bottom
IN	inverted output signal
L05	improved linearity 0.05 %
L10	improved linearity 0.10 %
HG	Increased extraction force
T40	increased temperature range low -40...+85°C
T120	increased temperature range high -20...+120 °C
IP67	protection class IP67
CP	corrosion protection SX50
ICP	increased corrosion protection SX50

Option	not combinable with
M4	CP, ICP
COR	ranges 50/150/250/750/1000/1250 mm
RI	CP, ICP
HG	IP67, ranges 125/375/625/1250 mm
T40	L05, L10
T120	IP67, COR, CP, ICP, 10V, 420A, SA12
IP67	HG, TEMP120, ICP
CP	M4, RI
ICP	IP67, M4, RI

Bold text: standard with shorter lead time

ORDER CODE DIGITAL OUTPUT INCREMENTAL

SX50 – □ – □ – □ – □ – □

Measurement ranges [mm] 500 / 750 / 1250	
Resolution [Pulses/mm] 1 / 4 / **10** / **20** / 28.8	
Output type Linedriver according to RS422 (TTL) Push-Pull	 **L** **G**
Connection Connector output radial, M12, 8 poles Cable output radial, specify length in m (minimum 2 m) example: **KR02** = 2 meter, KR05 = 5 meter	 **SR12** KR_ _
Version Standard Sensor with options	 - O

Option	Description
M4	rope fixation M4 thread
COR	synthetic wire rope, made out of Coramid
RI	ring eye (instead of rope clip)
S1	rope outlet sideways top
S2	rope outlet sideways bottom
S3	rope outlet bottom
K1	cable/connector orientation top
K2	cable/connector orientation left
K3	cable/connector orientation bottom
L02	improved linearity 0.02 %
IP67	protection class IP67
CP	corrosion protection SX50

Option	not combinable with
M4	CP
COR	ranges 750/1250 mm
RI	CP
L02	resolutions 1 / 4 / 10
CP	M4, RI

Bold text: standard with shorter lead time

ORDER CODE DIGITAL OUTPUT ABSOLUTE

SX50 — □ — □ — □ — □

Measurement ranges [mm]	
500 / 750 / 1250	

Interfaces / Bus systems	
SSI	SSI
CANopen	CAN

Output	
Cable output tangential, 1 m, PUR	KT01
Cable output tangential, 5 m, PUR	KT05

Version	
Standard	-
Sensor with options	O

Option	Description
M4	rope fixation M4 thread
COR	synthetic wire rope, made out of Coramid
RI	ring eye (instead of rope clip)
S1	rope outlet sideways top
S2	rope outlet sideways bottom
S3	rope outlet bottom
K1	cable/connector orientation top
K2	cable/connector orientation left
K3	cable/connector orientation bottom
IP67	protection class IP67
CP	corrosion protection SX50

Option	not combinable with
M4	CP
COR	ranges 750/1250 mm
RI	CP
CP	M4, RI

ACCESSORIES ANALOG OUTPUT

Cable with mating connector M12, 4 poles, shielded	
K4P2M-S-M12	2 m, straight connector
K4P5M-S-M12	5 m, straight connector
K4P10M-S-M12	10 m, straight connector
K4P2M-SW-M12	2 m, angular connector
K4P5M-SW-M12	5 m, angular connector
K4P10M-SW-M12	10 m, angular connector

Mating Connector M12, 4 poles, shielded	
D4-G-M12-S	straight, M12 for self assembly
D4-W-M12-S	angular, M12 for self assembly

Digital display 1 channel, 0...10V/4...20 mA	
PAXP000B	1 channel, supply: 85 to 250 VAC
PAXP001B	1 channel, supply: 11…36 VDC/24 VAC

Digital display 2 channels, 0...10V/4...20 mA	
PAXDP00B	2 channels, supply: 85 to 250 VAC
PAXDP01B	2 channels, supply: 11…36 VDC/24 VAC

Digital display 1 channel, Potentiometer	
PAXD000B	1 channel, supply: 85 to 250 VAC
PAXD001B	1 channel, supply: 11…36 VDC/24 VAC

ACCESSORIES DIGITAL OUTPUT INCREMENTAL

Cable with mating connector M12, 8 poles, shielded	
K8P2M-S-M12	2 m, straight connector
K8P5M-S-M12	5 m, straight connector
K8P10M-S-M12	10 m, straight connector
K8P2M-SW-M12	2 m, angular connector
K8P5M-SW-M12	5 m, angular connector
K8P10M-SW-M12	10 m, angular connector

Mating Connector M12, 8 poles, shielded	
D8-G-M12-S	straight, M12 for self assembly
D8-W-M12-S	angular, M12 for self assembly

Digital display 1 channel, Linedriver L (input level TTL, RS422)	
WAY-DS-5VH	display only
WAY-DG-5VH	display with two presets and switching outputs
WAY-DR-5VH	display with serial interface RS232 / RS485

Digital display 1 channel, Push-Pull G	
WAY-DS	display only
WAY-DG	display with two presets and switching outputs
WAY-DR	display with serial interface RS232 / RS485

Subject to change without prior notice.

WayCon Positionsmesstechnik GmbH
email: info@waycon.de
internet: www.waycon.de

Head Office
Mehlbeerenstr. 4
82024 Taufkirchen
Tel. +49 (0)89 67 97 13-0
Fax +49 (0)89 67 97 13-250

Office Köln
Auf der Pehle 1
50321 Brühl
Tel. +49 (0)2232 56 79 44
Fax +49 (0)2232 56 79 45